Intelligent folding electrical wheelchair

One step folding

High performance dual motor / Strong power250W*2

Reinforced and upgraded frame for an easy travel

Loading capacity 150KG

Quick Fold

One step fold

Intelligent braking

Safe,easy-handling,
and convenient

Lithium battery

Boardable

Intelligent controller

360° rotation

PU Solid tyre

Suitalbe for all
terrian

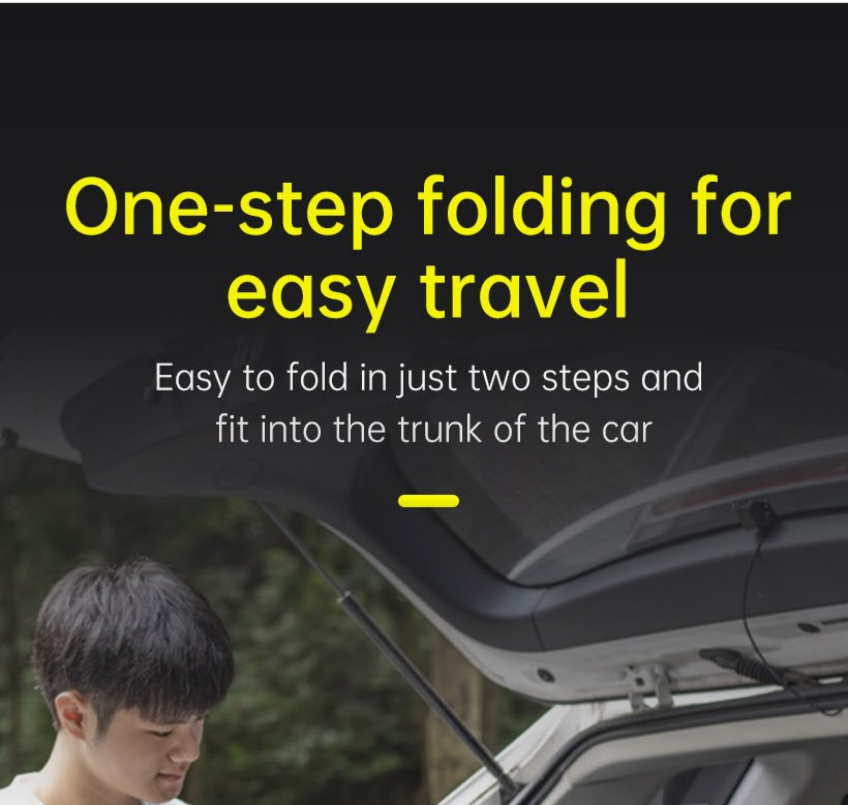

One-step folding for easy travel

Easy to fold in just two steps and
fit into the trunk of the car

STEP / 01

Pull the buckle

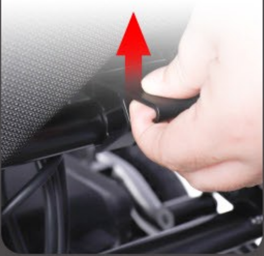

STEP / 02

Hold the backrest and fold

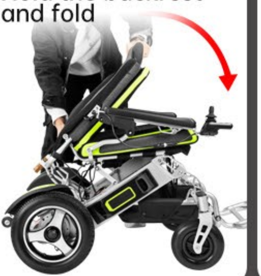

STEP / 03

It's folded

Intelligent braking system

Be assured the chair is under electrical
mode and it's braked
once you release the joystick

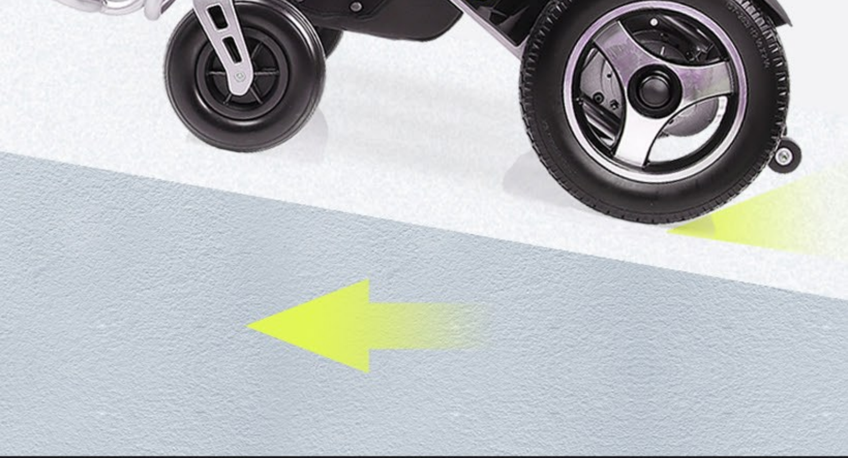

High performance dual brushless motor

Movement Long life	250W*2 Brushless motor	Quiet energy-saving

Quick-released

Lithium battery 6Ah*2

Long driving range up to 15-18km,
Detachable and durable.

12.5"PU solid rear tyre

Suitable for all terrian

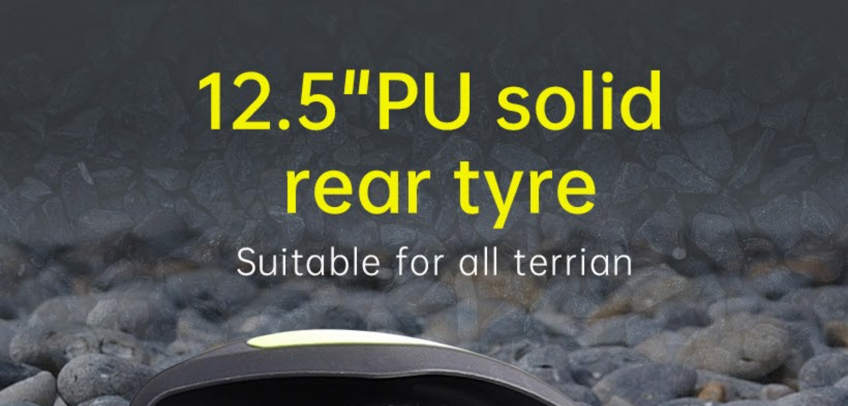

12.5''
NOT FOR HIGHWAY USE

Cross the lawn

Crossing the flagstone road

Over cobblestones

Intelligent controller with 360°rotation

Left or right joystick position
5 speed level for your choice

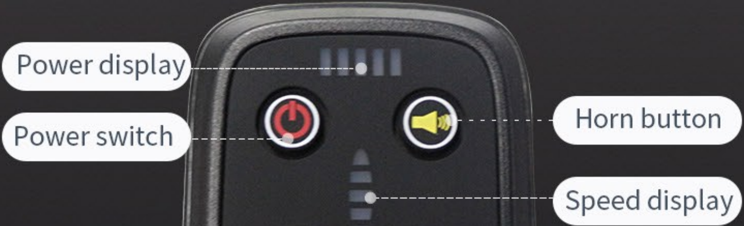
Power display
Power switch
Horn button
Speed display

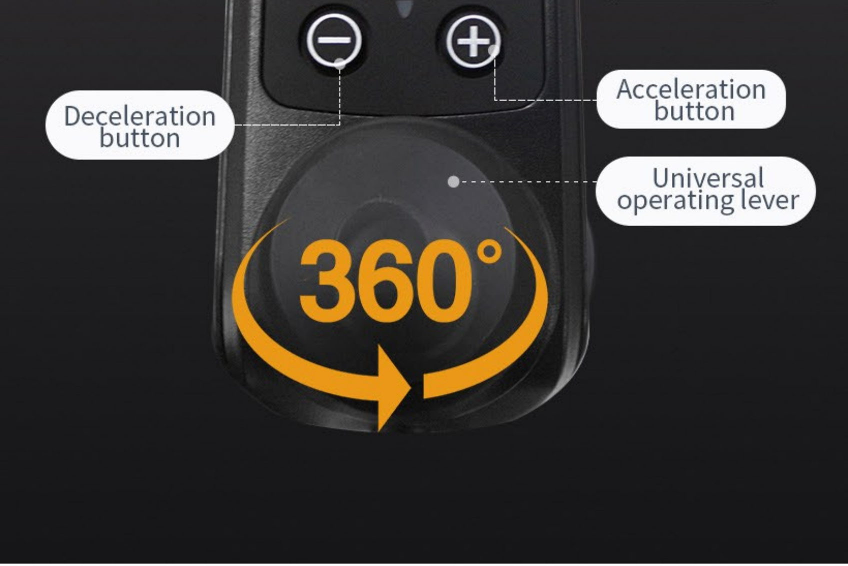
Deceleration button
Acceleration button
Universal operating lever
360°

Foldable armrest

It can be lifted up by 90°, easy for a side enterance.

Foldable footrest

Can be folded completely under the chair

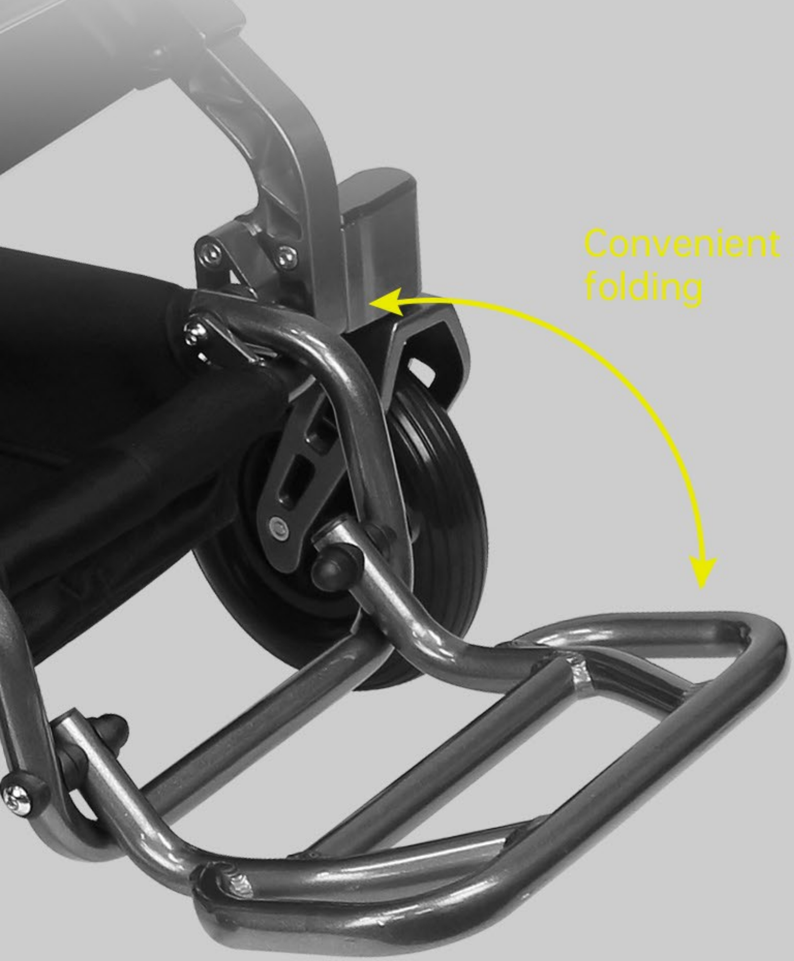
Convenient folding

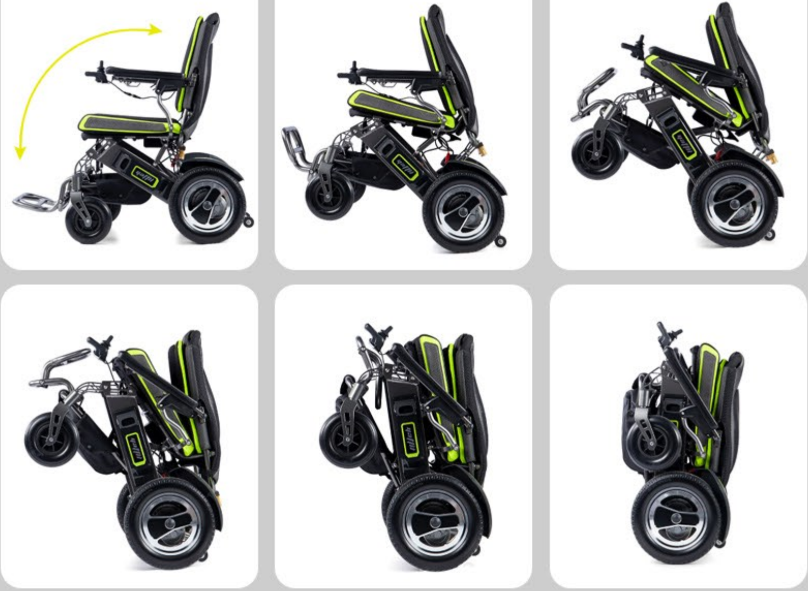

Product parameters

Name	**Electric wheelchair**
Model	**YE200**
Motors(pair)	**Brushless motor 250W*2**
Brake	**Electromagnetic braking system**
Weight capacity	**150kg**
Batteries	**Lithium battery 24V 6Ah*2**
Maximum range	**15-18km**
Obstacle	**4cm**
Cell	**lithium cell**
Net weight	**25kg**
material quality	**Strong alluminum**
Max speed	**6km/h**

Size	Fold：79*60*37cm Develop：110*60*98cm
Tyre	8''front wheel、12.5'' rear wheel

Product Size

fold：79*60*37cm   develop：110*60*98cm

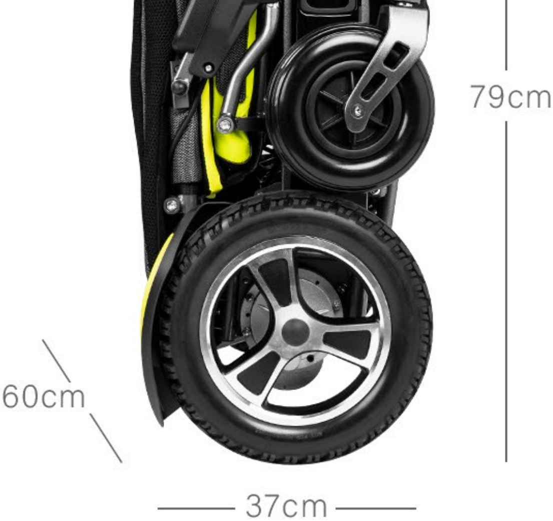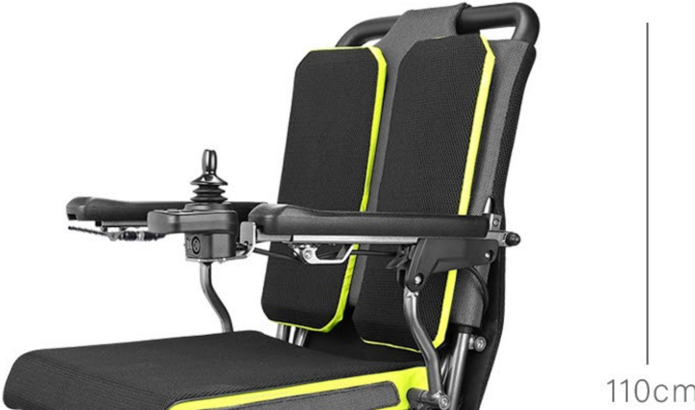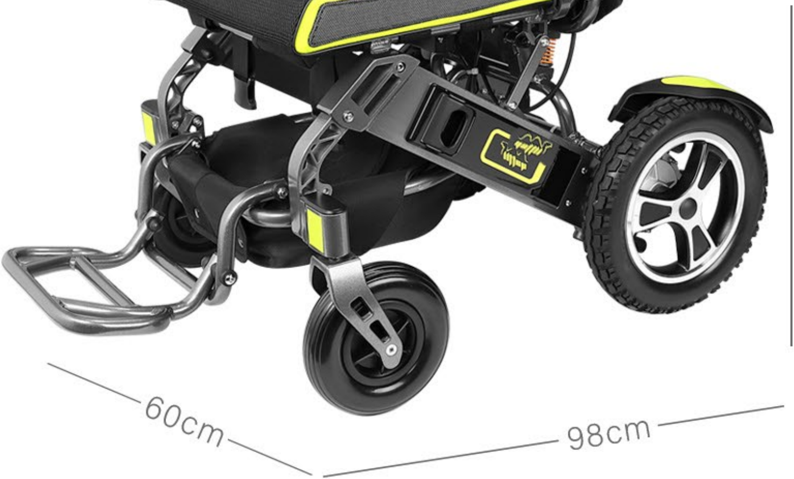
79cm
60cm
37cm